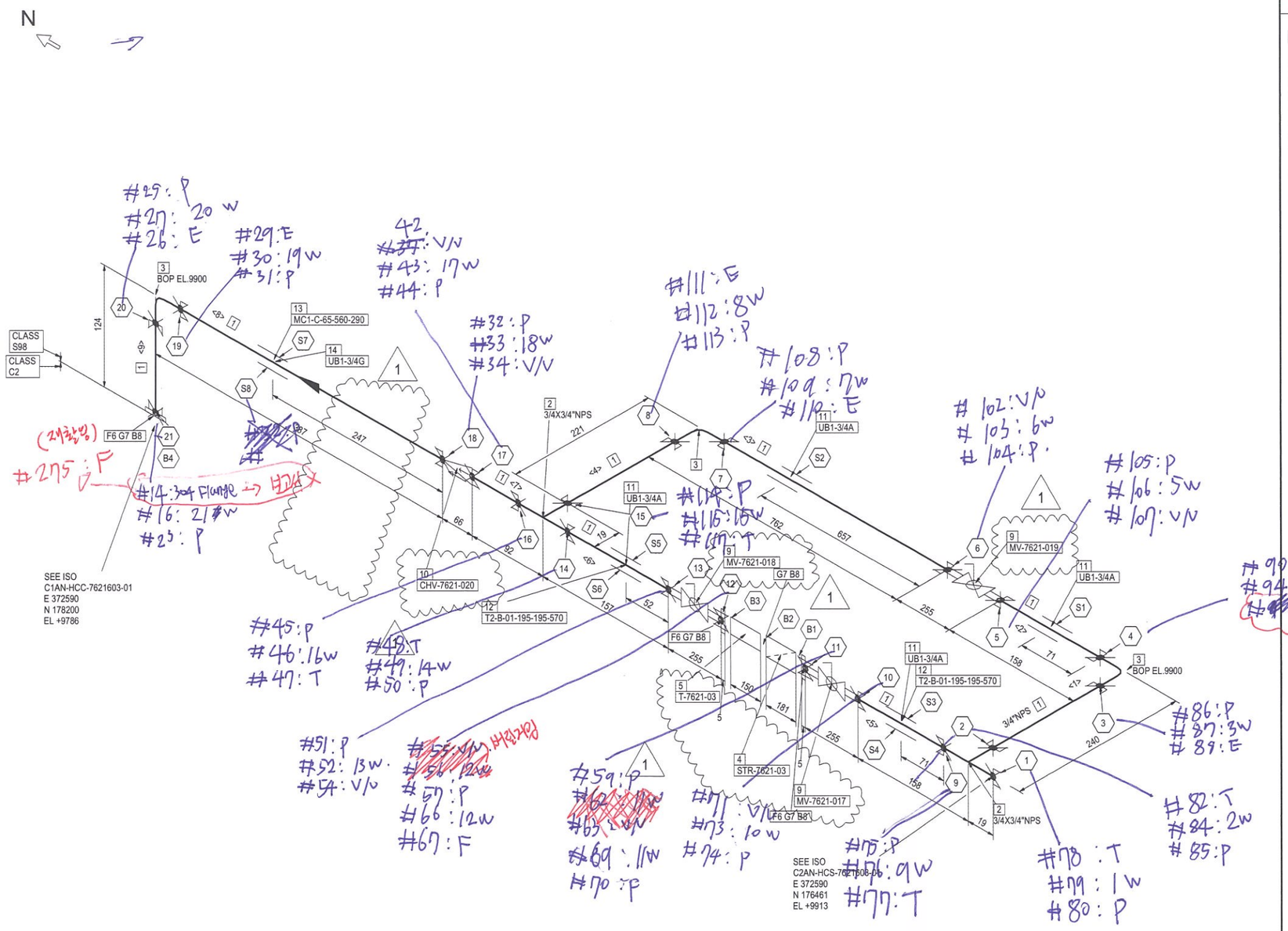

BILL OF MATERIALS

ERECTION MATERIALS

NO	COMPONENT DESCRIPTION	SIZE	QTY	MAT'L CLASS	SHORT CODE	ITEM
1	PIPE SMLS ASTM A312-316/316L SCH40S PE	3/4"	2.2 M	S98	P	PA02-000000956
2	TEE SW CL3000 ASTM A182-F316/316L	3/4X3/4"	2	S98	T	PB99-000038722
3	90 DEG. ELBOW (LR) SW CL3000 ASTM A182-F316/316L	3/4"	3	S98	E	PB99-000038441
4	TAG NO : STR-7621-03, STRAINER - Y-TYPE	3/4"	1			SPECIALTY
5	TAG NO : T-7621-03, STEAM TRAP - LINE TRAP	3/4"	1			SPECIALTY
6	SOCKET-WELDING FLANGE RF CL150 ASTM A182-F316/316L SCH40S	3/4"	3	S98	F	PB01-000004840
7	SPIRAL WOUND GASKET O-RING: SS 304 CL150 HOOP : SS 316L FILLER : GRAPHIT E 4.5MM(0.18") THK.	3/4"	4	S98	G	PF01-000009264
8	70 STUD BOLT W/2-NUT HEAVY HEX. NUT ASTM A193-B8 CL.2 ASTM A194-8 UN/UN R x MM	1/2"	16	S98	B	PB99-000076882
9	BALL VALVE SW ANSI(ASTM) CL600 ASTM A351-CF8M SS316 TRIM RTFE SEAT FLO ATING BALL FB 3 PIECE BODY LV. OP. (VAB060T)	3/4"	3	S98	VL	PP04-000007760
10	CHECK VALVE SW CL800 ASTM A182-F316/316L SS316 TRIM STELLITE SEATS BC PISTON DISC (VAC015)	3/4"	1	S98	VC	PP06-000009507
11	UB1-3/4A	3/4"	4			UB1-A
12	T2-B-01-195-195-570	3/4"	2			T2-B
13	MC1-C-65-560-290	3/4"	1			MC1-C-H
14	UB1-3/4G	3/4"	1			UB1-G

CUT PIPE LENGTH

PIECE NO	LENGTH (MM)	NPD (IN)	REMARKS	PIECE NO	LENGTH (MM)	NPD (IN)	REMARKS
<1>	202	3/4		<2>	139	3/4	
<3>	743	3/4		<4>	202	3/4	
<5>	139	3/4		<6>	138	3/4	
<7>	73	3/4		<8>	368	3/4	
<9>	100	3/4					

Project PROVIDENCE
Approval For Construction
PIPING MANAGER Bea Chang Won
2025-09-08

NOTE ; ASTERISK MARK(*) SHALL BE ADJUSTED AT FIELD AS PER THE FINAL VENDOR PRINT.

NPS (Inch)	MAT'L CLASS	OPER. PRFSS. (bar.g)	OPER. TEMP. (°C)	DESIGN PRESS. (bar.g)	DESIGN TEMP. (°C)	TEST PRESS. (bar.g)	TEST MEDIUM	INSULATION TYPE	INSULATION TH'K (mm)	PAINT CODE	PWHT	NDE (RT,%)	STRESS
0.75	S98	3	144	4.0 / F.V	172	6	H	IHI	-	-	N	5	-

REV.	DATE	DESCRIPTION	PREPARED	CHECKED	APPROVED
1	08-09-25	ISSUED FOR REVISION	N.H.PARK	M.H.SUNG	T.H.LIM
0	23-07-25	ISSUED FOR INFORMATION	N.H.PARK	M.H.SUNG	T.H.LIM

PROJECT: PROJECT PROVIDENCE

LOTTE BIOLOGICS
LOTTE E&C

PART	AG	PLANT	N	AREA	CUT
P&ID NO.	K1-DSL-UT-PID-7621-01			PROJ. NO.	16480
GAD NO.	-			LINE NO.	0.75-HCS-7621603-S98-IHI
DWG NO.	C2AN-HCS-7621603-02			SH'T NO.	1 OF 1

CWA NO. C2AN
FLUID HCS
REV. 1

PIPE modified at 10:37:28 Aug 2025, Drawing Created at 11:00:14 28 August 2025
PIPE NAME : 0.75-HCS-7621603-S98-IHI_C2AN-02

NOTE : THE ORIGINAL AND ALL COPIES OF THIS DRAWING TOGETHER WITH COPYRIGHT ARE THE SOLE PROPERTY OF LEC, SEOUL, KOREA AND SHALL NOT BE USED FOR ANY PURPOSE WITHOUT WRITTEN PERMISSION OF LEC.

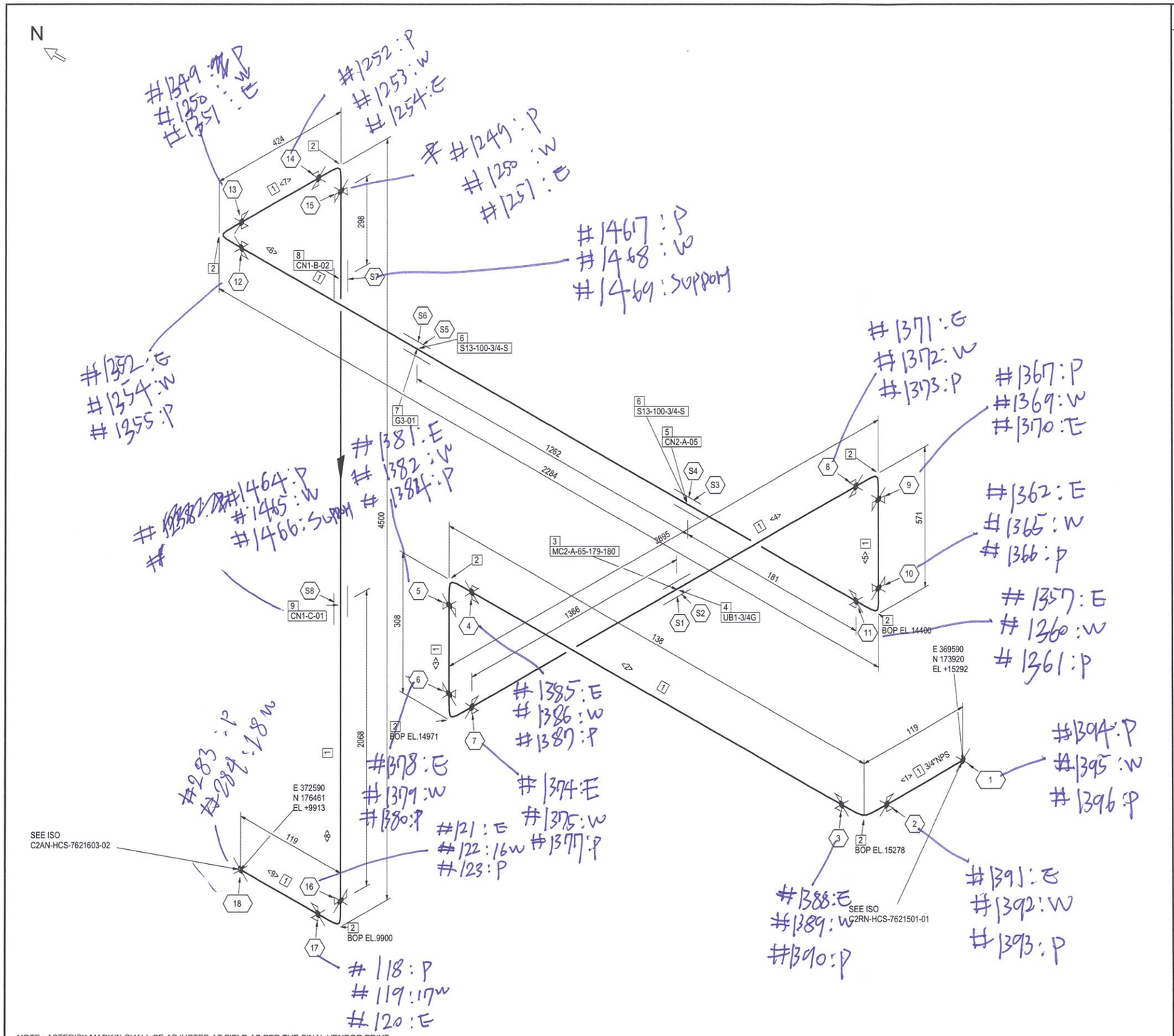

NOTE ; ASTERISK MARK(*) SHALL BE ADJUSTED AT FIELD AS PER THE FINAL VENDOR PRINT.

BILL OF MATERIALS

ERECTION MATERIALS

NO	COMPONENT DESCRIPTION	SIZE	QTY	MAT'L CLASS	SHORT CODE	ITEM
1	PIPE SMLS ASTM A312-316/316L SCH40S PE	3/4"	10.9 M	S98	P	PA02-000000956
2	90 DEG. ELBOW (LR) SW CL3000 ASTM A182-F316/316L	3/4"	8	S98	E	PB99-000038441
3	MC2-A-65-179-180	3/4"	1			MC2-A-H
4	UB1-3/4G	3/4"	1			UB1-G
5	CN2-A-05	3/4"	1			CN2-A-H
6	S13-100-3/4-S	3/4"	2			S13
7	G3-01	3/4"	1			G3
8	CN1-B-02	3/4"	1			CN1-B-V
9	CN1-C-01	3/4"	1			CN1-C-V

CUT PIPE LENGTH

PIECE NO	LENGTH (MM)	NPD (IN)	REMARKS	PIECE NO	LENGTH (MM)	NPD (IN)	REMARKS
<1>	100	3/4		<2>	100	3/4	
<3>	270	3/4		<4>	2656	3/4	
<5>	533	3/4		<6>	2246	3/4	
<7>	386	3/4		<8>	4462	3/4	
<9>	100	3/4					

Project PROVIDENCE

Approval For Construction
PIPING MANAGER Bea Chang Won
2025-11-03

NPS (Inch)	MAT'L CLASS	OPER. PRFSS. (bar.g)	OPER. TEMP. (°c)	DESIGN PRESS. (bar.g)	DESIGN TEMP. (°c)	TEST PRESS. (bar.g)	TEST MEDIUM	INSULATION TYPE	INSULATION TH'K (mm)	PAINT CODE	PWHT	NDE (RT,%)	STRESS
0.75	S98	3	144	4.0 / F.V	172	6	H	IHI	-	-	N	5	-

REV.	DATE	DESCRIPTION	PREPARED	CHECKED	APPROVED
0-C	03-11-25		N.H.PARK	M.H.SUNG	T.H.LIM
0-B	11-08-25		N.H.PARK	M.H.SUNG	T.H.LIM
0-A	24-07-25		N.H.PARK	M.H.SUNG	T.H.LIM
0	17-07-25	ISSUED FOR INFORMATION	N.H.PARK	M.H.SUNG	T.H.LIM

PROJECT: PROJECT PROVIDENCE

LOTTE BIOLOGICS
LOTTE E&C

PART	AG	PLANT	N	AREA	CUT	CWA NO.	C2AN
P&ID NO.	K1-DSL-UT-PID-7621-01			PROJ. NO.	16480	FLUID	HCS
CAD NO.	-			LINE NO.	0.75-HCS-7621603-S98-IHI		
DWG NO.	C2AN-HCS-7621603-01			SH'T NO.	1 OF 1	REV.	0-C

PIPE modified at 17:17:10 Jul 2025 , Drawing Created at 14:19:19 11 July 2025
PIPE NAME : 0.75-HCS-7621603-S98-IHI_C2AN-01

NOTE : THE ORIGINAL AND ALL COPIES OF THIS DRAWING TOGETHER WITH COPYRIGHT ARE THE SOLE PROPERTY OF LEC, SEOUL, KOREA AND SHALL NOT BE USED FOR ANY PURPOSE WITHOUT WRITTEN PERMISSION OF LEC.

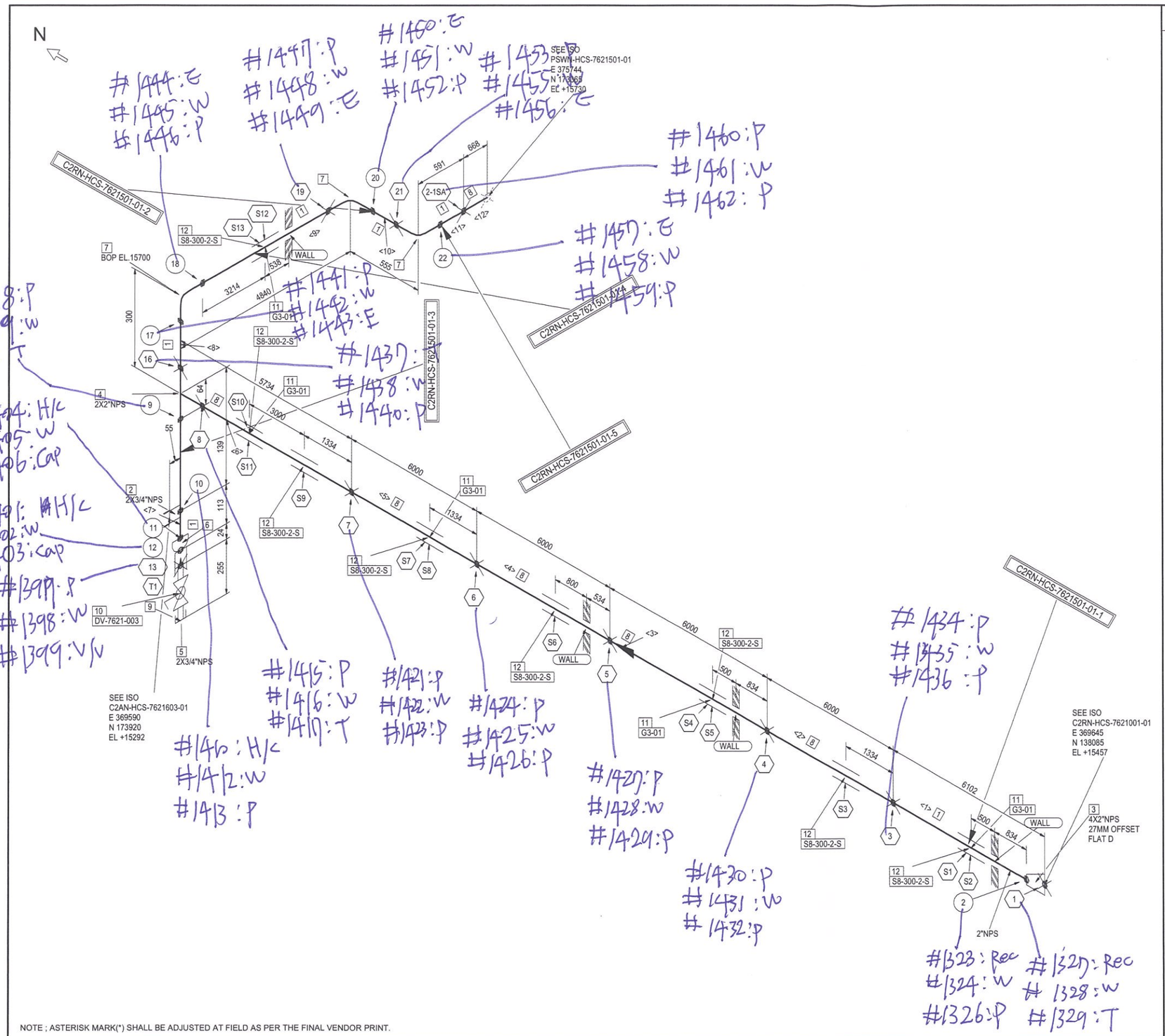

BILL OF MATERIALS

FABRICATION MATERIALS

NO	COMPONENT DESCRIPTION	SIZE	QTY	MAT'L CLASS	SHORT CODE	ITEM
1	PIPE EFW ASTM A312-316/316L SCH10S BE RT=100%	2"	12.0 M	S98	P	PA02-000001902
2	HALF COUPLING SW CL3000 ASTM A182-F316/316L	2X3/4"	1	S98	TH	PB99-000038951
3	ECC. REDUCER BW WELDED ASTM A403-WP316/316L SCH10S * SCH10S	4X2"	1	S98	RE	PB99-000038599
4	TEE BW WELDED ASTM A403-WP316/316L SCH10S	2X2"	1	S98	T	PB99-000038690
5	HALF COUPLING SW CL3000 ASTM A182-F316/316L	2X3/4"	1	S98	TH	PB99-000038951
6	CAP BW SMLS ASTM A403-WP316/316L SCH10S	2"	1	S98	CP	PB99-000038457
7	90 DEG. ELBOW (LR) BW WELDED ASTM A403-WP316/316L SCH10S	2"	3	S98	E	PB99-000038409

ERECTION MATERIALS

NO	COMPONENT DESCRIPTION	SIZE	QTY	MAT'L CLASS	SHORT CODE	ITEM
8	PIPE EFW ASTM A312-316/316L SCH10S BE RT=100%	2"	30.4 M	S98	P	PA02-000001902
9	CAP SCR'D (NPT) CL3000 ASTM A182-F316/316L	3/4"	1	S98	CPT	PB99-000038501
10	BALL VALVE SW W/NIPPLE ANSI(ASTM) CL600 ASTM A351-CF8M SS316 TRIM RTFE SEAT FLOATING BALL FB 3 PIECE BODY LV. OP. A312-316/316L SCH80S 75MM TOE (NPT)/POE (VL1-D16)	3/4"	1	S98	VLST1	PP04-000008192
11	G3-01	2"	5			G3
12	S8-300-2-S	2"	8			S8

CUT PIPE LENGTH

PIECE NO	LENGTH (MM)	NPD (IN)	REMARKS	PIECE NO	LENGTH (MM)	NPD (IN)	REMARKS
<1>	6000	2		<2>	6000	2	
<3>	6000	2		<4>	6000	2	
<5>	6000	2		<6>	5670	2	
<7>	150	2		<8>	161	2	
<9>	4688	2		<10>	403	2	
<11>	515	2		<12>	668	2	

Project PROVIDENCE
Approval For Construction
PIPING MANAGER Bea Chang Won
2025-12-12

NOTE ; ASTERISK MARK(*) SHALL BE ADJUSTED AT FIELD AS PER THE FINAL VENDOR PRINT.

NPS (Inch)	MAT'L CLASS	OPER. PRFSS. (bar.g)	OPER. TEMP. (°c)	DESIGN PRESS. (bar.g)	DESIGN TEMP. (°c)	TEST PRESS. (bar.g)	TEST MEDIUM	INSULATION TYPE	INSULATION TH'K (mm)	PAINT CODE	PWHT	NDE (RT,%)	STRESS
4	S98	3	144	4.0 / F.V	172	6	H	IHI	25	-	N	5	-
2	S98	3	144	4.0 / F.V	172	6	H	IHI	25	-	N	5	-

REV.	DATE	DESCRIPTION	PREPARED	CHECKED	APPROVED
1-C	12-12-25		N.H.PARK	M.H.SUNG	T.H.LIM
1-B	16-10-25		N.H.PARK	M.H.SUNG	T.H.LIM
1-A	16-09-25		N.H.PARK	M.H.SUNG	T.H.LIM
1	08-09-25	ISSUED FOR REVISION	N.H.PARK	M.H.SUNG	T.H.LIM
0-A	26-06-25		N.H.PARK	M.H.SUNG	T.H.LIM
0	02-06-25	ISSUED FOR INFORMATION	N.H.PARK	M.H.SUNG	T.H.LIM

PROJECT: PROJECT PROVIDENCE

LOTTE BIOLOGICS
LOTTE E&C

PART	AG	PLANT	N	AREA	CUT	CWA NO.	C2RN
P&ID NO.	K1-DSL-UT-PID-7621-01			PROJ. NO.	16480	FLUID	HCS
GAD NO.	-			LINE NO.	2-HCS-7621501-S98-IHI		
DWG NO.	C2RN-HCS-7621501-01			SH'T NO.	1 OF 1	REV.	1-C

PIPE modified at 10:37 28 Aug 2025 , Drawing Created at 11:00:38 28 August 2025
PIPE NAME : 2-HCS-7621501-S98-IHI_C2RN-01

NOTE : THE ORIGINAL AND ALL COPIES OF THIS DRAWING TOGETHER WITH COPYRIGHT ARE THE SOLE PROPERTY OF LEC, SEOUL, KOREA AND SHALL NOT BE USED FOR ANY PURPOSE WITHOUT WRITTEN PERMISSION OF LEC.

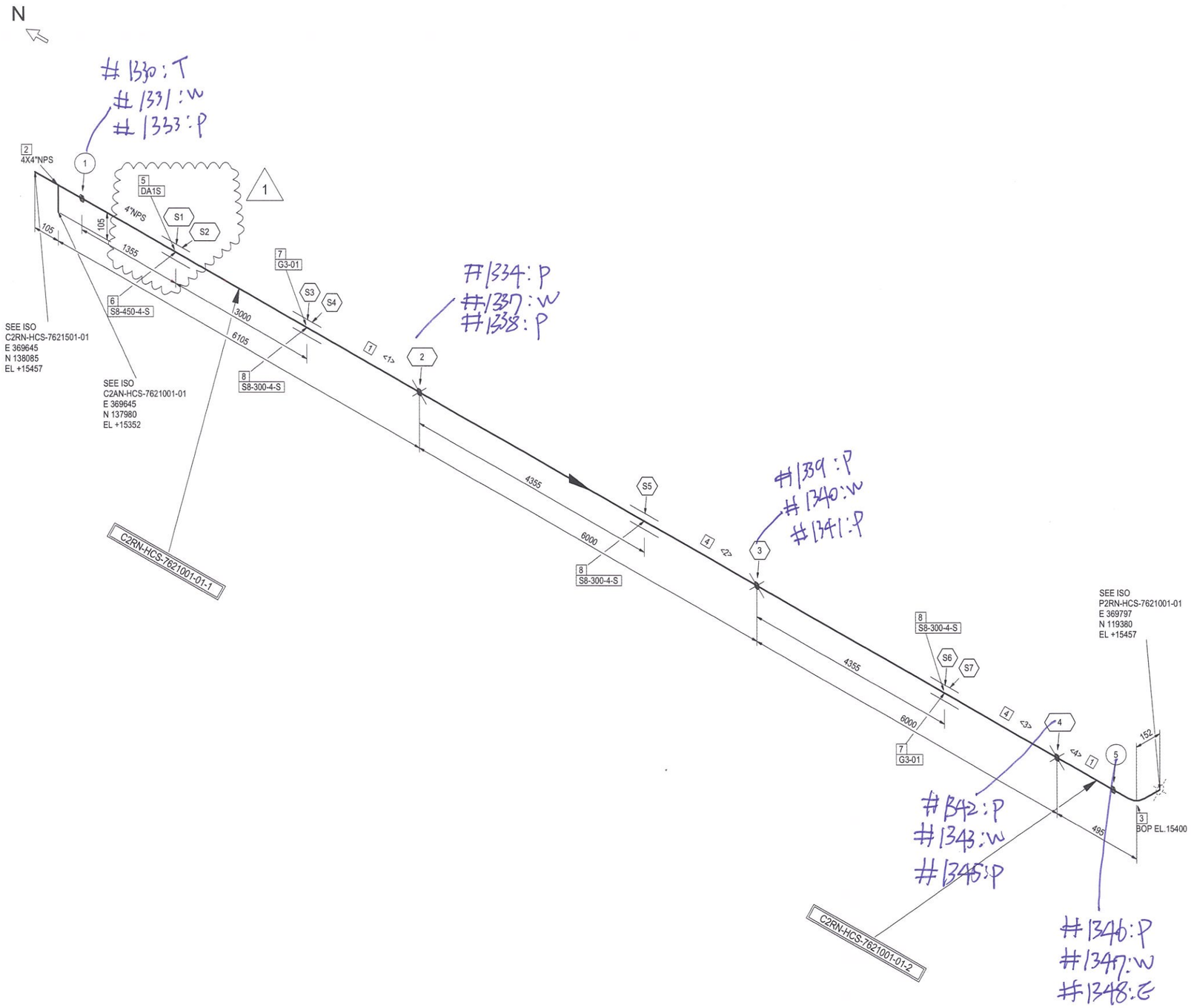

BILL OF MATERIALS

FABRICATION MATERIALS

NO	COMPONENT DESCRIPTION	SIZE	QTY	MAT'L CLASS	SHORT CODE	ITEM
1	PIPE EFW ASTM A312-316/316L SCH10S BE RT=100%	4"	6.4 M	S98	P	PA02-000001904
2	TEE BW WELDED ASTM A403-WP316/316L SCH10S	4X4"	1	S98	T	PB99-000038692
3	90 DEG. ELBOW (LR) BW WELDED ASTM A403-WP316/316L SCH10S	4"	1	S98	E	PB99-000038411

ERECTION MATERIALS

NO	COMPONENT DESCRIPTION	SIZE	QTY	MAT'L CLASS	SHORT CODE	ITEM
4	PIPE EFW ASTM A312-316/316L SCH10S BE RT=100%	4"	12.0 M	S98	P	PA02-000001904
5	DA1S	4"	1			DA1S
6	S8-450-4-S	4"	1			S8
7	G3-01	4"	2			G3
8	S8-300-4-S	4"	3			S8

CUT PIPE LENGTH

PIECE NO	LENGTH (MM)	NPD (IN)	REMARKS	PIECE NO	LENGTH (MM)	NPD (IN)	REMARKS
<1>	6000	4		<2>	6000	4	
<3>	6000	4		<4>	343	4	

Project PROVIDENCE

Approval For Construction
PIPING MANAGER Bea Chang Won
2025-09-08

NOTE ; ASTERISK MARK(*) SHALL BE ADJUSTED AT FIELD AS PER THE FINAL VENDOR PRINT.

NPS (Inch)	MAT'L CLASS	OPER. PRFSS. (bar.g)	OPER. TEMP. (°c)	DESIGN PRESS. (bar.g)	DESIGN TEMP. (°c)	TEST PRESS. (bar.g)	TEST MEDIUM	INSULATION TYPE	INSULATION TH'K (mm)	PAINT CODE	PWHT	NDE (RT,%)	STRESS
4	S98	3	144	4.0 / F.V	172	6	H	IHI	25	-	N	5	-

REV.	DATE	DESCRIPTION	PREPARED	CHECKED	APPROVED
1	08-09-25	ISSUED FOR REVISION	N.H.PARK	M.H.SUNG	T.H.LIM
0	02-06-25	ISSUED FOR INFORMATION	N.H.PARK	M.H.SUNG	T.H.LIM

PROJECT
PROJECT PROVIDENCE

LOTTE BIOLOGICS
LOTTE E&C

PART	AG	PLANT	N	AREA	CUT	CWA NO.	C2RN
P&ID NO.	K1-DSL-UT-PID-7621-01			PROJ. NO.	16480	FLUID	HCS
GAD NO.	-			LINE NO.	4-HCS-7621001-S98-IHI		
DWG NO.	C2RN-HCS-7621001-01			SH'T NO.	1 OF 1	REV.	1

PIPE modified at 10:37:28 Aug 2025, Drawing Created at 11:00:48 28 August 2025
PIPE NAME : 4-HCS-7621001-S98-IHI_C2RN-01

NOTE : THE ORIGINAL AND ALL COPIES OF THIS DRAWING TOGETHER WITH COPYRIGHT ARE THE SOLE PROPERTY OF LEC, SEOUL, KOREA AND SHALL NOT BE USED FOR ANY PURPOSE WITHOUT WRITTEN PERMISSION OF LEC.

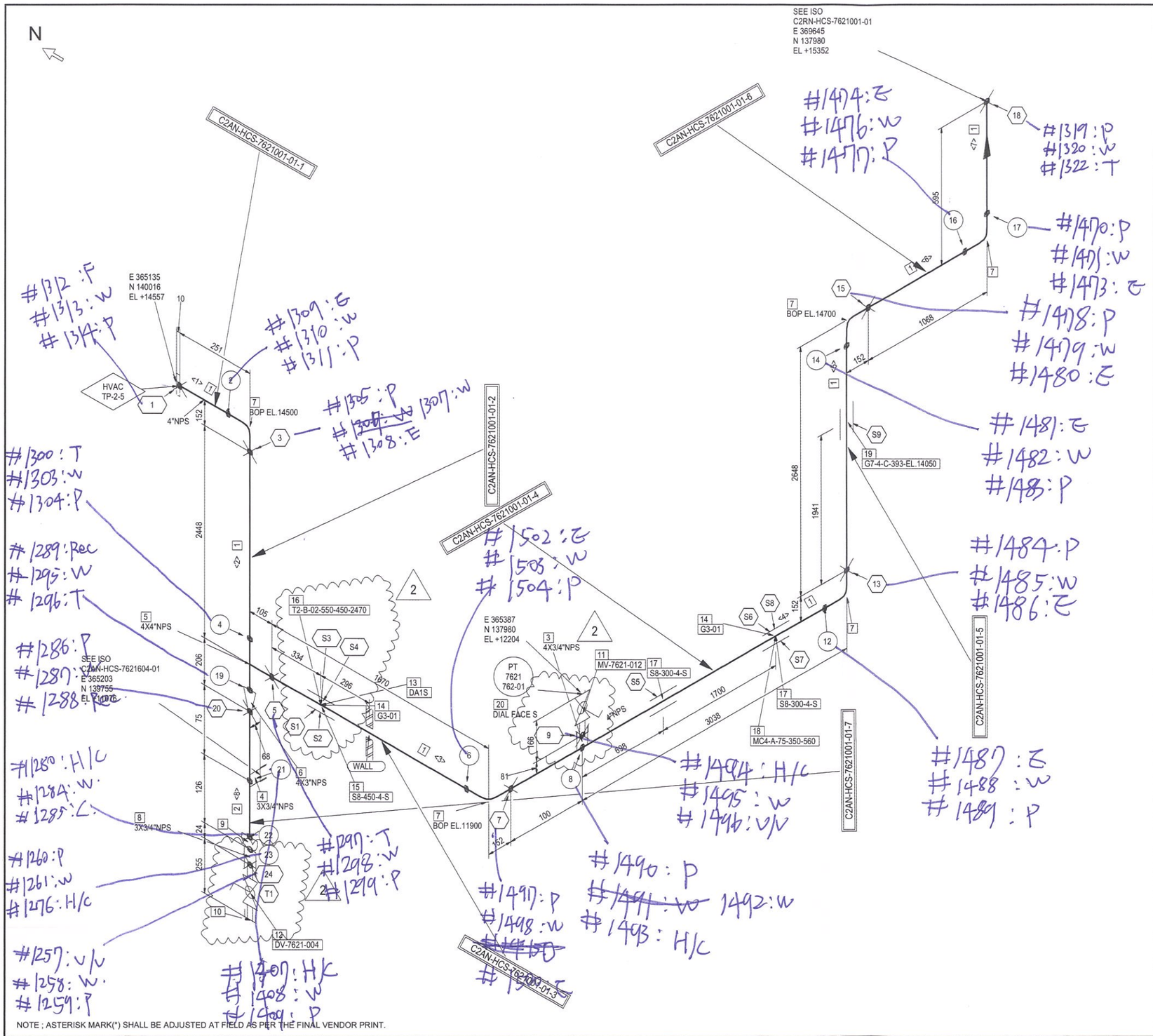

NOTE ; ASTERISK MARK(*) SHALL BE ADJUSTED AT FIELD AS PER THE FINAL VENDOR PRINT.

BILL OF MATERIALS

FABRICATION MATERIALS

NO	COMPONENT DESCRIPTION	SIZE	QTY	MAT'L CLASS	SHORT CODE	ITEM
1	PIPE EFW ASTM A312-316/316L SCH10S BE RT=100%	4"	10.9 M	S98	P	PA02-000001904
2	PIPE EFW ASTM A312-316/316L SCH10S BE RT=100%	3"	0.2 M	S98	P	PA02-000001903
3	HALF COUPLING SW CL3000 ASTM A182-F316/316L	4X3/4"	1	S98	TH	PB99-000038951
4	HALF COUPLING SW CL3000 ASTM A182-F316/316L	3X3/4"	1	S98	TH	PB99-000038951
5	TEE BW WELDED ASTM A403-WP316/316L SCH10S	4X4"	1	S98	T	PB99-000038692
6	CON. REDUCER BW WELDED ASTM A403-WP316/316L SCH10S * SCH10S	4X3"	1	S98	RC	PB99-000038507
7	90 DEG. ELBOW (LR) BW WELDED ASTM A403-WP316/316L SCH10S	4"	5	S98	E	PB99-000038411
8	HALF COUPLING SW CL3000 ASTM A182-F316/316L	3X3/4"	1	S98	TH	PB99-000038951
9	CAP BW SMLS ASTM A403-WP316/316L SCH10S	3"	1	S98	CP	PB99-000038458

ERECTION MATERIALS

NO	COMPONENT DESCRIPTION	SIZE	QTY	MAT'L CLASS	SHORT CODE	ITEM
10	CAP SCR'D (NPT) CL3000 ASTM A182-F316/316L	3/4"	1	S98	CPT	PB99-000038501
11	BALL VALVE SW*SCR'D (NPT) ANSI(ASTM) CL600 ASTM A351-CF8M SS316 TRIM RT FE SEAT FLOATING BALL FB 3 PIECE BODY LV. OP. (VAB060TA)	3/4"	1	S98	VLST	PP04-000007558
12	BALL VALVE SW W/NIPPLE ANSI(ASTM) CL600 ASTM A351-CF8M SS316 TRIM RTFE SEAT FLOATING BALL FB 3 PIECE BODY LV. OP. A312-316/316L SCH80S 75MM TOE (NPT)/POE (VL1-D16)	3/4"	1	S98	VLST1	PP04-000008192
13	DA1S	4"	1			DA1S
14	G3-01	4"	2			G3
15	S8-450-4-S	4"	1			S8
16	T2-B-02-550-450-2470	4"	1			T2-B
17	S8-300-4-S	4"	2			S8
18	MC4-A-75-350-560	4"	1			MC4-A
19	G7-4-C-393-EL.14050	4"	1			G7-C

INSTRUMENTS

20	TAG NO : PT-7621-762-01, INSTRUMENT	3/4"	1			INSTRUMENT

CUT PIPE LENGTH

PIECE NO	LENGTH (MM)	NPD (IN)	REMARKS	PIECE NO	LENGTH (MM)	NPD (IN)	REMARKS
<1>	99	4		<2>	2343	4	
<3>	1518	4		<4>	2986	4	
<5>	2496	4		<6>	916	4	
<7>	443	4		<8>	150	3	

Project PROVIDENCE

Approval For Construction
PIPING MANAGER Bea Chang Won
2025-09-08

NPS (Inch)	MAT'L CLASS	OPER. PRFSS. (bar.g)	OPER. TEMP. (°c)	DESIGN PRESS. (bar.g)	DESIGN TEMP. (°c)	TEST PRESS. (bar.g)	TEST MEDIUM	INSULATION TYPE	INSULATION TH'K (mm)	PAINT CODE	PWHT	NDE (RT,%)	STRESS
0.75	S98	3	144	4.0 / F.V	172	6	H	IHI	25	-	N	5	-
4	S98	3	144	4.0 / F.V	172	6	H	IHI	25	-	N	5	-

REV.	DATE	DESCRIPTION	PREPARED	CHECKED	APPROVED
2	08-09-25	ISSUED FOR REVISION	N.H.PARK	M.H.SUNG	T.H.LIM
1		ISSUED FOR REVISION	N.H.PARK	M.H.SUNG	T.H.LIM
0	02-07-25	ISSUED FOR INFORMATION	N.H.PARK	M.H.SUNG	T.H.LIM

PROJECT: PROJECT PROVIDENCE

LOTTE BIOLOGICS
LOTTE E&C

PART	AG	PLANT	N	AREA	CUT	CWA NO.	C2AN
P&ID NO.	K1-DSL-UT-PID-7621-01			PROJ. NO.	16480	FLUID	HCS
GAD NO.	-			LINE NO.	4-HCS-7621001-S98-IHI		
DWG NO.	C2AN-HCS-7621001-01			SH'T NO.	1 OF 1	REV.	2

PIPE modified at 10:37:28 Aug 2025 , Drawing Created at 11:00:44 28 August 2025
PIPE NAME : 4-HCS-7621001-S98-IHI_C2AN-01

NOTE : THE ORIGINAL AND ALL COPIES OF THIS DRAWING TOGETHER WITH COPYRIGHT ARE THE SOLE PROPERTY OF LEC, SEOUL, KOREA AND SHALL NOT BE USED FOR ANY PURPOSE WITHOUT WRITTEN PERMISSION OF LEC.